N92-27804

Wind Tunnel Magnetic Suspension Systems at the University of Southampton, England.

Michael J. Goodyer

Department of Aeronautics and Astronautics

INTRODUCTION

The magnetic suspension system at Southampton University has been used in two rôles: as a device producing useful aerodynamic data, and a vehicle to develop and demonstrate new technology for application to a projected larger facility. Examples of both follow, beginning with an outline of the quest to develop methods for reaching high angles of attack because of current interest in researching the associated aerodynamics.

Magnetic suspension systems applied to wind tunnels were designed to levitate models in the normal attitude for flight, that is nose more-or-less into wind as seen on figure 1. This shows a typical transport model of about the normal proportions for this test section, flying at the required attitude. The model contains suitable permanent magnets and is levitated by a set of copper wire electromagnets distributed around the test section. To complete the control loop there is an optical system monitoring its position. The equipment is capable of controlling the model in all degrees of freedom.

Light beams, wider than the diameter of the fuselage but not visible in this picture, pass through windows, cross the test section converging on the central region where the model flies. We launch by hand, then close up the test section for the test.

It was found that such designs did not allow large angular excursions of the model from this attitude. Rather typically we could reach perhaps 25 degrees of pitch, limited first by a restricted field of view of the optical system. Investigations of the stalling behaviour of conventional configurations of aircraft such as that shown, also of missile and fighter aerodynamics, require higher pitch angles which leads to the first topic.

HIGH ANGLES OF ATTACK

One non-fundamental restriction, just mentioned, was caused by the nature of the optical position sensor which was incapable of monitoring large ranges of angle. More fundamental difficulties were associated with control. The electromagnet array had in the meantime evolved from a somewhat unsymmetrical set of 7 to a more symmetric group of 10. Further, the controller had been changed from analogue to digital, and the model position sensors to the use of relatively long arrays of photo-diodes coupled with broad laser light sheets which lent themselves to modification for high alpha. We set out to exploit these circumstances to reach 90 degrees angle of attack.

Two further changes were required. Investigations of the force and moment capabilities of the electromagnet had shown that it was difficult to derive a controlling side force at that angle. The geometry of the lateral control electromagnets was changed in detail as shown in figure 2 to introduce this force component. The outlines of a delta winged model are shown in solid for zero angle of attack, dotted for 90 degrees.

The functions of the electromagnets change with angle of attack. For example coils 1 and 2 are effective in resisting the drag force on a model at zero alpha but ineffective in exerting a pitching moment. In contrast at 90 degrees angle of attack they will not resist drag but are very effective in producing a pitching moment. Such rôle changes, and there are more, cannot easily be accommodated by an analog control system but can (ref.1) with digital control. Our equipment will now suspend over the range -5 to + 95 degrees pitch. Figure 3 shows an axi- symmetric model which has been launched at zero alpha then photographed after rotating to 90 degrees in response to commands entered through the computer's keyboard. The angle sweep, from zero to 90 degrees, takes about 2 seconds.

Smoke has been introduced for this photograph to show the paths of the light beams which monitor position. The digital nature of the optical system renders it somewhat immune to smoke. Four broad beams shining diagonally upwards and across the test section are very apparent: these monitor the sides of the model. They are partly interrupted by the model as evidenced by a change of width. A fifth, much narrower beam in this view, shines across the tail to monitor axial movement.

DYNAMIC MEASUREMENTS

Usually the measurement of the aerodynamic effects of a model motion such as pitching requires the model to be oscillated, sinusoidally for convenience. This type of measurement is fairly common using a mechanical support for the model, the support also acting as an oscillator and force/moment balance. The magnetic suspension system at Southampton University was built in the first instance to explore the possibilities of carrying out these and similar measurements, with no mechanical support to restrict motion or to affect the airflow over the model. Over several years a range of techniques was developed.

Steady rotation

The first technique was simple and did not use an oscillatory motion but, instead, steady rotation. This exploited the low friction of rotation in roll (2). Wings were mounted on an axi-symmetric fuselage, figure 4, and the aerodynamic damping of the rolling motion measured. The model is viewed from the tail. It was flown at zero incidence to the flow and, with the wind on, was spun up in roll using mechanical means, then released to roll freely.

The relatively rapidly decaying roll rate was monitored with the wind on and the roll torque determined using the moment of inertia. The rear of the model carried a simple roll angle optical encoder.

Measurements of Magnus effects

Another form of dynamic measurement using steady rotation is that of Magnus force and moment. These are aerodynamic loads which can appear on spinning objects flying through a fluid, due to their spin. The effects arise quite generally, for example in sport where they can be exploited, but also in military hardware where the effect must be quantified. The magnetic suspension system can measure Magnus force quite easily and at Southampton we have carried out an extensive range of such tests exploring the effects of spin rate, model geometry, air speed and angle of attack (3,4). The model, shown on figure 5 with a variety of alternative base shapes (9 in all) alongside, was spun to high rotational speeds while levitated at the desired incidence, using air jets impinging on the model's outer skin.

Rotational speeds up to 25,000 rpm were reached with these models which had a body diameter of 22mm. The spinup device was retracted through trap doors into the floor of the tunnel, the wind turned on and the Magnus effects monitored during the subsequent slow decay in rpm. An investigation such as this, of the influence of base shape with the flow uncorrupted by a mechanical support, is a good example of the exploitation of a useful property of magnetic suspension.

Oscillatory measurements

The stability and ease of control of an aircraft in flight depends, among other things, on its tendency to align itself with the airflow in the manner of a weathercock, but also on the natural damping of disturbances, in particular angular disturbances. Each property is measured in wind tunnel tests, the latter by oscillating the model. The aerodynamic damping is measured usually by monitoring the moment required to induce steady amplitude oscillations in the desired degree of freedom. In order to obtain data from a model test which is relevant to full scale flight, among other things it is necessary to reproduce in the model test a frequency parameter $\omega l/V$ corresponding to full scale, where $\omega =$ angular frequency, l is a length scale and V is the flight speed. It can be seen that a test on a small model at the correct airspeed requires a high frequency of oscillation. This requirement is difficult to satisfy with a magnetic suspension system because the oscillatory forces are generated by an alternating component of the currents in electromagnets having high inductance. This places heavy demands on electrical power, in particular on voltage. A second source of difficulty arises because the component of the oscillating current which is overcoming the aerodynamic damping of the model's oscillation is small in comparison with the component of current which is inducing the motion. It is difficult to extract the damping component from the total current signal.

Our power supplies, which adequately suspend a model and resist steady aerodynamic loads, prove to give too restricted a frequency/amplitude envelope for dynamic testing. Mechanical equivalent equipment often exploits a resonant system: the stiffness of the support is chosen in conjunction with the mass or inertia of the model to produce an appropriately high resonant frequency. Excitation of the oscillatory motion at useful amplitudes is then easy at frequencies close to resonance, in the mode(s) of motion for which the equipment was designed. Further, the force or moment which is applied to the model at resonance is just that required to overcome the damping of the system, leading to simple measurements.

In order to overcome the difficulties identified in connection with the application of the magnetic suspension system to such testing we designed (5,6) a tuned model which had the characteristics of the mechanical system just described. The essence of the model's construction was the use of two spring-connected masses forming a resonant system. The notional construction is shown in the simplified sketch on figure 6 where it is seen that the construction introduces a pitching resonance the frequency of which is determined largely by the mechanics of the model.

The model comprises two masses coupled by a torsional spring. For convenience one mass was made the magnetic core of the model, the other its aerodynamic outer shell. The electromagnets can easily excite the resonance, now having to supply only the damping moment.

Figure 7 shows the construction of the model in more detail. A variety of wing planforms was tested on the same fuselage. Repositioning the wings allowed the axis of rotation to be varied relative to the wings. The fin was used mainly as a device providing a roll attitude signal to allow active roll control. The model was controlled in all degrees of freedom. The control of pitch introduced an unusual stability problem in that the optical position sensors monitored the fuselage which at some control frequencies moved in phase with the magnetic core but at others in anti-phase. Conventional control algorithms are very unstable.

A typical influence of airspeed on the frequency response of one version of the model is shown on figure 8. θ represents the amplitude of angular motion in pitch and M the amplitude of the applied pitching moment. There is a change in the height of the maxima with airspeed due largely to aerodynamic damping. The shift in the frequency of the peak is due to a variation of aerodynamic stiffness in pitch, in this case a negative stiffness is present leading to a reducing frequency with increasing airspeed. The signals representing aerodynamic damping and stiffness may be extracted with relative ease.

CRYOGENICS WITH THE MSBS

We have used cryogenic technology with the suspension equipment in two ways, first with a cryogenic wind tunnel, then, as a quite separate exercise, using superconductivity in the model.

The cryogenic wind tunnel

This type of wind tunnel is used to raise the Reynolds number of an aerodynamic test to match more closely the values of flight. As a demonstration of this technology for improving the quality of aerodynamic testing it was decided to modify an existing cryogenic wind tunnel to suit the MSBS. In this way the advantages of no mechanical support would be linked with high Reynolds number flow.

This is a low speed cryogenic wind tunnel having a closed circuit and is driven by an electric motor and fan. Liquid nitrogen is introduced to the circuit cooling the tunnel by evaporation. There is a vent to hold the internal pressure essentially at atmospheric. Any air or moisture in the tunnel is quickly displaced and test gas becomes pure nitrogen. Our maximum fan speed is not dependent on temperature with the result that, on cooling from room temperature to the minimum temperature of just over 80K, the maximum Reynolds number rises by a factor of about 12.

An outline of the tunnel and MSBS is shown on figure 9. The gas flow is clockwise. The modifications to the tunnel from its normal configuration involved a completely new test section leg from the screen region to the end of the first diffuser (6). One of the principal changes was to provide light paths for the optical position monitoring system. The light sources and pickups were outside the tunnel and at room temperature. The light beams shone through thick double-glazed windows, one formed by the test section itself which was manufactured from Lexan. The windows, purged in their inter-layers by dry nitrogen, were designed to keep their outsides free from condensation in the presence of a temperature difference, outside to inside, of about 200K.

Figure 10 is a photograph of the equipment taken during a cryogenic run. Two legs of the closed circuit can be seen running from the low center of the picture, to the left and then away through a right-angled bend. Most of this region is covered with a black insulating foam rubber. A circular area part way along this section contains the fan, light in this picture because it was uninsulated and covered with frost. The MSBS is supported under the framework in the center of the picture while the LN_2 supply pipe runs to the tunnel from the bottom right. The test procedure was to launch the model by hand with the tunnel at room temperature. This was the purpose of the door indicated on figure 9 positioned in the diffuser wall just downstream of the test section. The door was then sealed and the fan started in order to help circulate the cooling nitrogen. The tunnel and model cooled together to the test temperature. Measurements were made of the influence of Reynolds number on drag coefficient. The exercise also served to demonstrate the practicality of this combination of technologies.

The superconducting model.

The capital cost of a magnetic suspension system for application to wind tunnels lies largely in the electromagnet set and their power supplies. Further, if the electromagnets are superconducting at helium temperature then the running and capital costs are also affected by the helium equipment (8). The cost of this equipment depends on size and the aerodynamic loads to be carried by the model. The electromagnets must produce fields which, in conjunction with the size and strength of magnetisation of the model's core, satisfy the force specification. It is clear that the strongest possible model magnet must be used. According to calculations it had become apparent that replacing a ferromagnetic core with a superconducting coil could usefully increase the magnetic strength of the model and proportionally reduce the strengths of the electromagnets, with cost implications. This even with the space penalty of insulation and helium in the model.

It was decided to proceed with the construction of such a model to face the design and control problems, and for demonstration purposes. The specification was written by the Department of Aeronautics and Astronautics, the model flown in their MSBS and was designed and constructed (9) in the Institute of Cryogenics.

The model comprised a lightweight superinsulated cryostat containing a superconducting coil with space for helium. There were pipes for filling with liquid helium and venting helium gas. There were electrical connections for charging the coil with current when in the superconducting state, for operating an internal superconducting switch to allow internal current circulation and hence the supply to be disconnected, and instrumentation. The model was flown with the coil in the persistent mode with all umbilicals disconnected. The superconducting lifetime was on-specification at 30 minutes.

The model, somewhat oversized for our small MSBS, in figure 11 is shown flying during a force and moment calibration session for which purpose there are weights hanging underneath. The model, circular in section, is viewed end-on looking along our octagonal test section. The calibrations were linear to the limits of resolution of our fairly good data logging equipment. The model proved easy to levitate with no control problems and as a result of these and several other good experiences with it has served to open the way (10) to using this technology on a larger scale.

FORCE AND MOMENT CALIBRATION

The loads acting on a model are derived from a relationship between them and the currents in the electro-magnets. The relationship is determined by calibration. In our case each of six force and moment components depends on the currents in ten electro-magnets. The dependence varies with the design of the magnetic core of the model, on its position and attitude. The determination of a comprehensive calibration matrix even for one core is a daunting proposition. We are deterred by the perceived complexity and labour and in practice simplify matters by calibrating selectively using a narrow range of geometric variables chosen to just cover those anticipated in the wind tunnel test:

One popular calibration method is to load the suspended model with sets of known forces and moments and to record the electromagnet currents. Extra to the list above is a factor associated with this method which further inhibits full calibration, the factor being mechanical complexity associated with providing accurately known calibration loads.

Various solutions to the calibration problem have been sought in the past. One (11) features a force balance within the model. The balance, mostly of conventional design and mounted between the model's aerodynamic shell and its magnetic core, is calibrated separately and is intended to provide the aerodynamic force/moment data during a tunnel test by telemetry. The balance and its telemetry occupy model volume which could often be used to good purpose some other way as has been discussed above in connection with the superconducting core.

For this reason we sought an alternative calibration scheme, and are updating an idea explored some time ago (12). The essential difference between their method and that described in the paragraph above is that known currents are applied to the electromagnets rather than known loads to the model. A balance, which is attached to the model just for the calibration, yields the resultant loads. Their balance proved unsatisfactory on several counts but the underlying principle was sound and is now being reinvestigated using modern technology.

A similar philosophy was adopted at MIT (13) where the balance was based on the use of air bearings.

The force balance is positioned outside the model and, if desired for brevity, may be used only to record the loads which were present during a wind tunnel test, a very attractive option. As the balance is now external to, and not part of the model, the calibration measurements are made after the test, for which the model is clamped to the balance. In the current embodiment of the scheme the recorded electromagnet currents and variations of model position/attitude from the preceding tunnel test are played back. The balance has provision to move the model to make it follow the recorded motions in the tunnel test, making use of the same optical position sensing system as was used in the wind-on tunnel test. The actual loads of the tunnel test are then measured. In principle the process can be fully automatic and quick.

We have constructed a prototype which has provision to pitch the model through a large range of angle of attack, with micro- adjustment in three translations to allow the model to be centred properly. The recorded outputs of the three force transducers will allow the derivation of three components of aerodynamic load: lift, drag and pitching moment.

CLOSING COMMENTS

This brief account of some highlights of the development of this magnetic suspension system has served to show, I hope, that even or perhaps especially with small scale equipment the University environment has contributed effectively to the exploitation and evolution of a new technology: exploitation in the creation of useful aerodynamic data which has proved possible despite small scale, evolution because the developments might not have taken place because of cost restrictions had the effort necessarily been done at large scale.

ACKNOWLEDGEMENT

Financial, material and moral support for the work reported above has been received from the British SERC and its forerunners, from NASA Langley Research Center and from the British Ministry of Defence for which we, current and past under- and post-graduate students and myself are grateful.

REFERENCES

1. Parker, D.H. Techniques for Extreme Attitude Suspension of a Wind Tunnel Model in a Magnetic Suspension and Balance System. NASA CR-181895, October 1989.

2. Goodyer, M.J. Some Force and Moment Measurements Using Magnetically Suspended Models in a Low Speed Wind Tunnel. ARL Symposium on Magnetic Wind Tunnel Model Suspension and Balance Systems, July 1966, pp.159-197 (N67-13587#).

3. Goodyer, M.J., Henderson, R.I. and Judd, M. The Measurement of Magnus Force and Moment Using a Magnetically Suspended Wind Tunnel Model. 13th International Magnetic Conference, London England, Apr. 14-17, 1975. IEEE Transactions on Magnetics, vol. MAG-11, Sept. 1975, pp. 1514-1516.

4. Henderson, R.I., Goodyer, M.J. and Judd, M. Measurements of Magnus Force on a Spinning Projectile, Including the Influence of Base Shape. Dept. of Aeronautics and Astronautics memo. AASU 75/4, December 1975, 56 pp., 59 figs.

5. Goodyer, M.J. The Magnetic Suspension of Wind Tunnel Models for Dynamic Testing. Univ. of Southampton, Dept. of Aeronautics and Astronautics - Ph.D Thesis, April 1968, Chapters 1-8 (Available from NTIS as N78-78589). Chapters 9-14 (Available from NTIS as N78-78218).

6. Judd, M. The Magnetic Suspension System as a Wind Tunnel Dynamic Balance. Presented at the 3rd International Congress on Instrumentation in Aerospace Simulation Facilities, Poly. Inst. of Brooklyn, Farmingdale, N.Y., May 1969 (ICIASF '69). IEEE publication 69C 19-AES, pp.198-206.

7. Britcher, C.P. The Magnetic Suspension and Balance System in the Cryogenic Wind Tunnel. Southampton Univ. B.Sc., Honours Project Report April 1978, 95pp.

8. Bloom, H.L. Design Concepts and Cost Studies for Magnetic Suspension and Balance Systems, Final Rept. Nov. 1980 - Mar. 1981. NASA-CR-165917, Jul. 1982, 346 pp.

9. Britcher, C.P., Goodyer, M.J., Scurlock, R.G. and Wu, Y.Y. A Flying Superconducting Magnet and Cryostat for Magnetic Suspension of Wind-Tunnel Models. In: Cryogenics, vol. 24, Apr. 1984, pp. 185-189.

10. Boom, R.W., Eyssa, Y.M., McIntosh, G.E., Abdelsalam, M.K., Scurlock, R.G., Wu, Y.Y., Goodyer, M.J., Balcerek, K., Eskins, J. and Britcher, C.P. Superconducting Electromagnets for Large Wind Tunnel Magnetic Suspension and Balance Systems. Presented at the Applied Superconductivity Conference, San Diego, CA, Sept. 9-13, 1984.

11. Roberts, P.W. and Tcheng, P. Strain-Guage Balance Calibration of a Magnetic Suspension and Balance System. In: ICIASF '87 - 12th, Williamsburg, Va., June 22-25, 1987, Record (A88-36483), New York, IEEE, Inc., 1987, pp. 308-321.

12. Howford, J., Wheeler, D.I. B.Sc. Final year Honours Project Reports, Dept. of Aeronautics and Astronautics, Univ. of Southampton, 1969/70.

13. Vlajinac, Milan. A Pneumatic Calibration Rig for Use with a Magnetic Suspension and Balance System. Tech. Rep., Nov. 1967 - Aug. 1969. Wright-Patterson AFB Rep. ARL-70-0016, MIT-TR-159, Jan. 1970, 41 pp.

ORIGINAL PAGE
BLACK AND WHITE PHOTOGRAPH

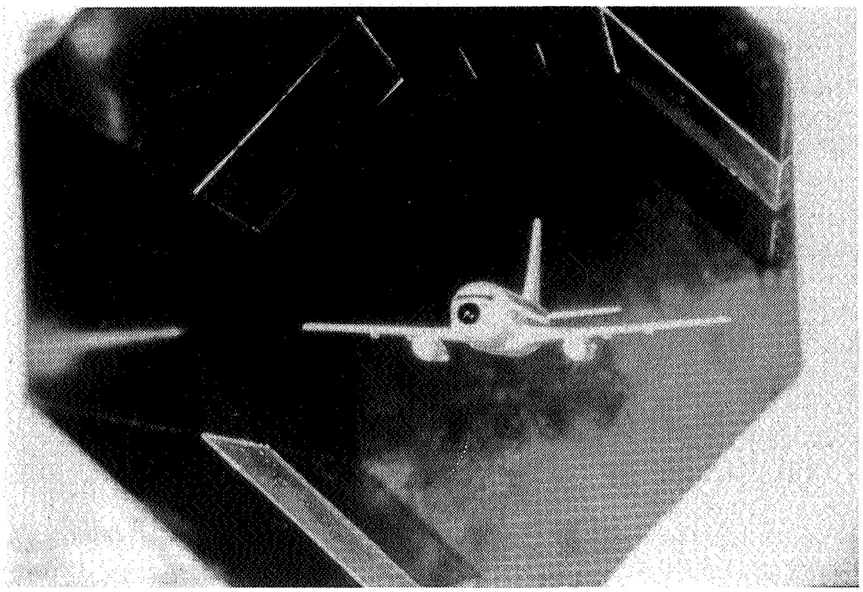

Figure 1. A transport aircraft model suspended in the test section of the 6-component magnetic suspension system at Southampton University.

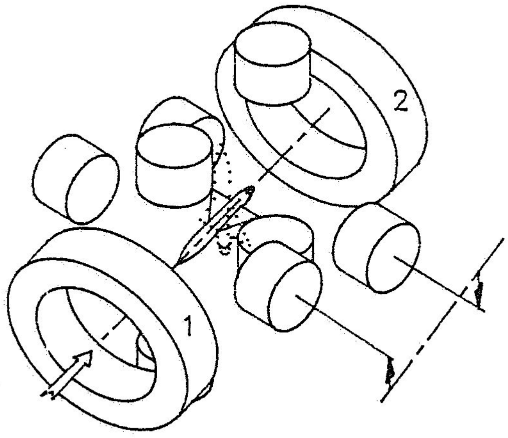

Lateral electro–magnets
on both sides
are skewed to permit
suspension through an
angle of attack range
of over 90 degrees

Figure 2. The electromagnet array. Displacement of the lateral set of four for high alpha.

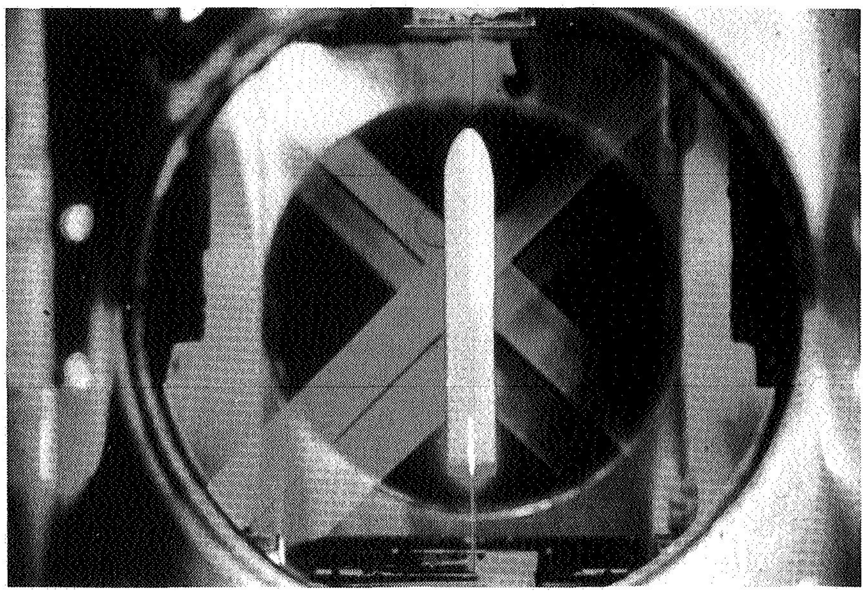

Figure 3. An axisymmetric wind tunnel model flown at 90° angle of attack.

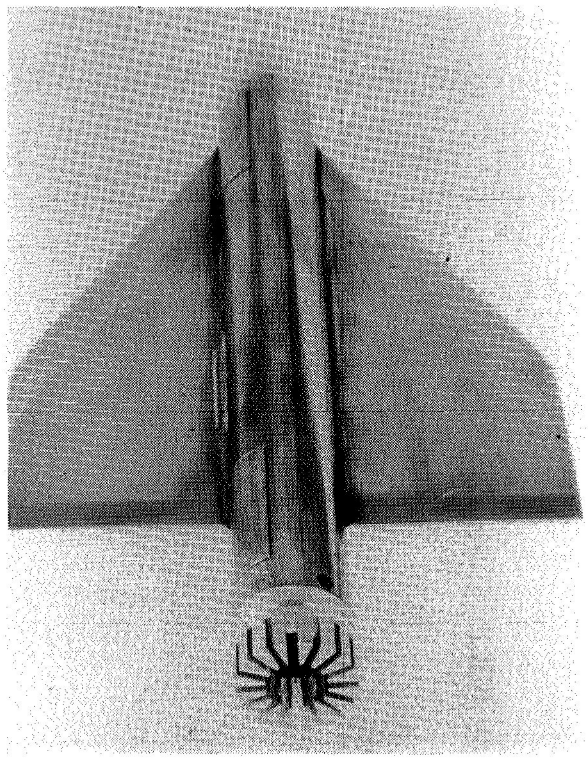

Figure 4. A wing-body model used in measurements of roll damping.

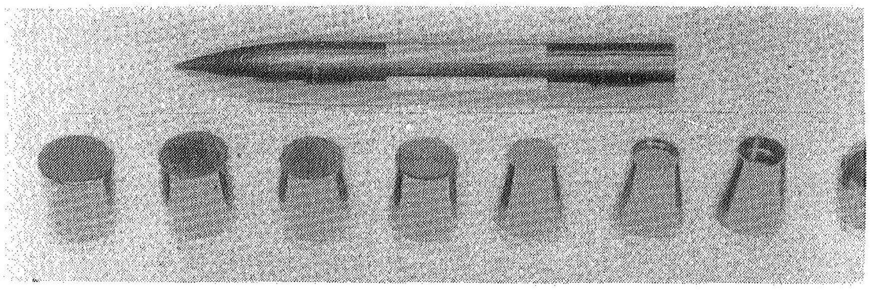

Figure 5. Ogive/cylinder model used in investigations of base shape on Magnus effects.

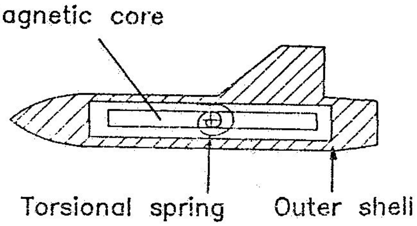

Figure 6. The essential mechanics of a two-mass tuned model.

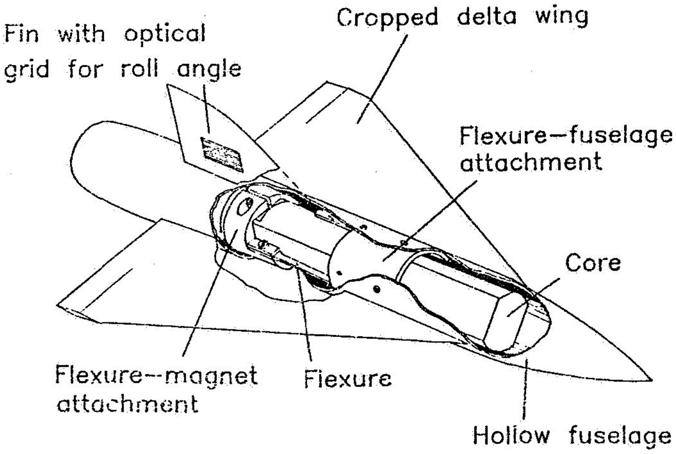

Figure 7. The pitch-tuned model.

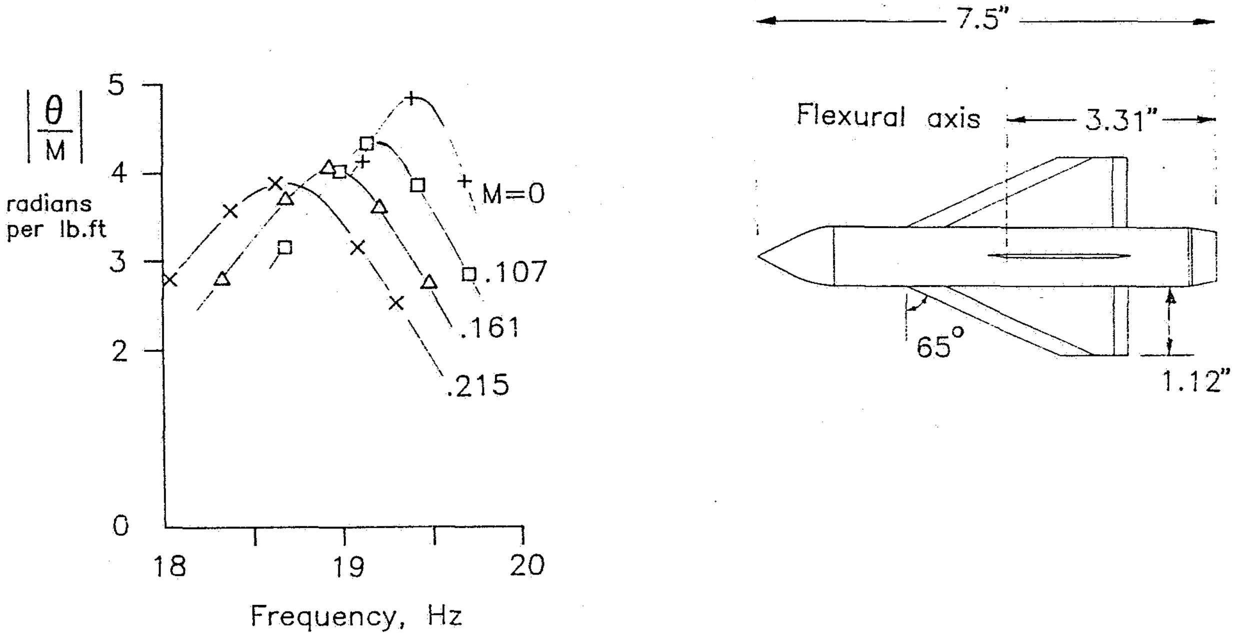

Figure 8. Effect of airspeed on frequency response in pitch for one wing planform and axis of rotation.

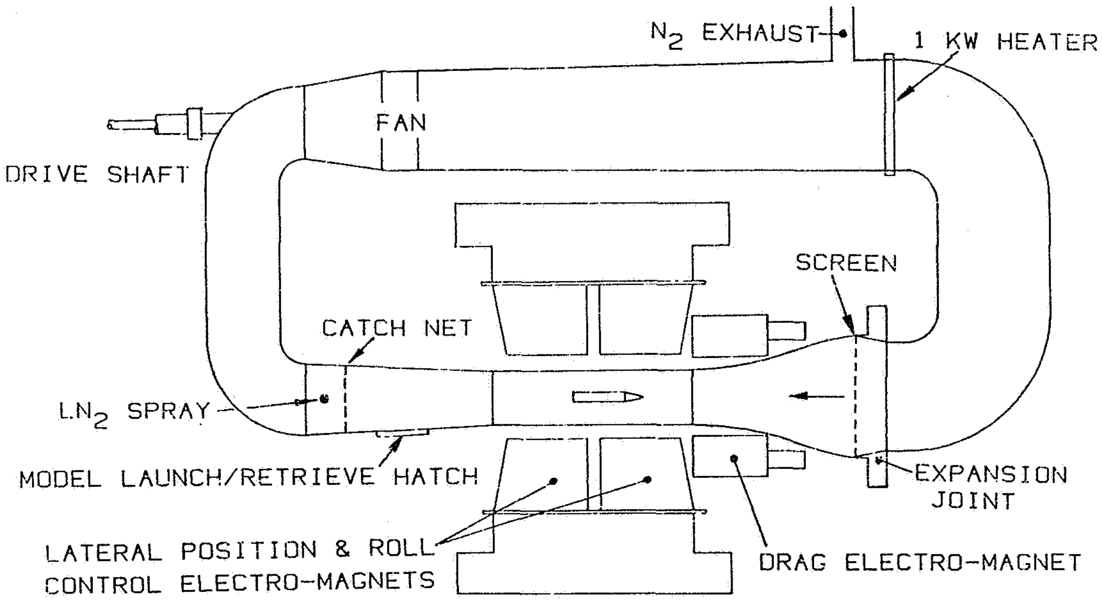

Figure 9. The 0.11m cryogenic wind tunnel and magnetic suspension system.

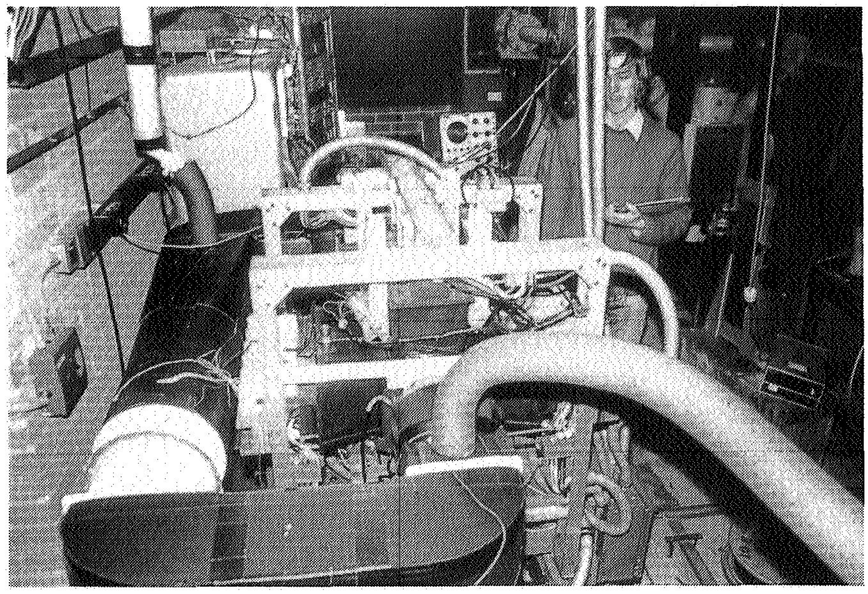

Figure 10. The MSBS operating with the cryogenic wind tunnel.

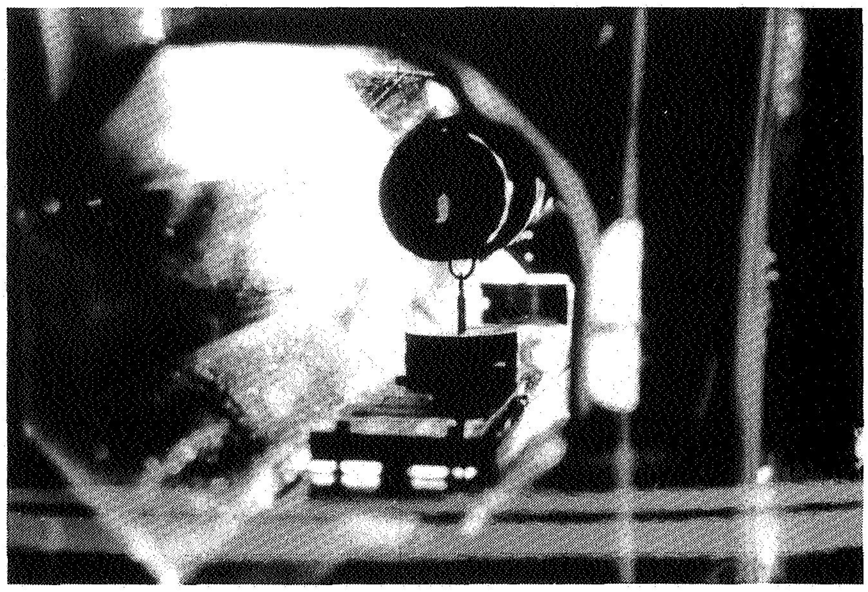

Figure 11. The superconducting solenoid model under calibration while flying in the MSBS.