2nd International Symposium on Magnetic Beaing
July 12-14, 1990, Tokyo, Japan

A LOW NOISE MAGNETIC BEARING WHEEL FOR SPACE APPLICATION

U. J. BICHLER

Teldix GmbH, Bosch Telecom, Grenzhöfer Weg 36, 6900 Heidelberg, Germany

Abstract

Magnetic bearing momentum wheels can be used as gyroscopic actuators in the attitude control system of spacecraft. If the wheel provides a vernier gimballing capability, three axis attitude control is possible with one wheel only.

A point of increasing interest is the bearing noise which is induced into the spacecrafts environment by the wheel. So called 'micro–gravity' space borne experiments and payloads can only stand very low levels of vibration. The possible noise sources are static and dynamic unbalance movements and the mechanical imperfections of the rotating parts.

One advantage of magnetic bearings is, that it is possible to suppress vibrations in the actively controlled degrees of freedom. Vibration suppression in this context means an isolation of the stator from the rotor in the frequency range of the disturbances rather than the suppression of unbalance movement of the rotor. That means, the rotor can rotate about its axis of inertia, while the sensor surface whirls or wobbles, and the controller will not 'see' this movement and will not make force of it. This has to be done without affecting the bearing stability.

In this paper, different possibilities of active vibration suppression are discussed and compared in simulations. For the best one, practical results are shown as well.

1 Introduction

Almost all spacecraft in orbit are equipped with ball bearing momentum or reaction wheels serving as actuators in the attitude control system. Amongst the various on board system components the wheels have been identified as one of the main sources of vibration noise due to residual unbalances, bearing imperfections, etc. This disadvantage can be avoided by the use of magnetic bearing wheels having all the well known special advantages as higher speed, no contact and lubrication, no stiction etc.. but permitting the acceptance of the increased electronics complexity with the inevitable impacts on mass, volume and reliability [1].

In magnetic bearings – as far as no permanent magnets are involved for direct attraction/repulsion – the bearing forces between the statoric and the rotoric part are fully controllable. They can be designed frequency dependant and with a time varying characteristic for example. Unbalance forces are transmitted to the stator only at an amount proportional to the suspension current. Applying a special control law, the disturbance component in the suspension current can be attenuated while keeping an overall stable levitation of the rotor. This in fact isolates the unbalance forces from the stator and the satellite structure.

A second interesting feature is, that if a vernier gimballing capability is implemented, the use of such a magnetic bearing momentum wheel enables an active satellite nutation damping and a three axis attitude control for small roll and yaw angles with one rotating mass only, that is, a fine pointing system with an accuracy depending only on the performance of the attitude sensors. This may result in overall mass savings and performance enhancements.

Magnetic bearing wheels should be on the first glance ideally suited to exhibit very low noise figures, because they have no mechanical contact between statoric and rotoric parts. But unfortunately there are several possible sources of disturbing forces and torques in magnetic bearing wheels as well. Some of these sources are due to unfavourable design details and should be foreseen and avoided in time. Some others are of principle nature but can be overcome by control means. These sources will be introduced first and then possibilities on how to suppress the disturbances are given.

2. Disturbances in Magnetic Suspension Systems

Unwanted disturbing forces and torques in magnetic bearings can have the following sources:

1. The main source is imbalance, which means that the rotational axis is shifted (resulting in static imbalance) or/and tilted (resulting in dynamic imbalance) against the natural axis of inertia. In a magnetic bearing this rotational axis is the axis of the position sensors measurement surface. Thus if the rotor spins about its natural axis, the measurement surface wobbles. In the subcritical speed range this leads to forces and torques which (try to) keep the rotor rotating about this axis. In the supercritical speed range, the rotor rotates about its natural axis, but the wobbling sensor signal component also causes forces and torques.

2. Mechanical imperfections of the rotating parts as irregularities in a sensor surface, a pole piece or a permanent magnetic field.
3. Poorly damped bearing control loops, for example due to a passive nature, nonlinearities, structural modes or coupling effects between the different loops.
4. Poorly damped gyroscopic oscillations as nutational and precessional motions, which means a whirling motion of the spin axis around the angular momentum vector, in connection with a type of bearing, that transforms motion into force.
5. Sensor types and locations, which do not reject harmonics produced by mechanical imperfections of the rotating measurement surface.

3. Principle of Active Vibration Suppression

In this paper, Active Vibration Suppression (AVS) means to enable the rotor rotating about its natural axis of inertia and to suppress all the resulting noise components from the whirling and wobbling sensor surface without affecting the suspension stability. It does not mean a suppression of the vibrational movement of the rotor surface to achieve a rotation about the geometrical axis [3,5] because then the full imbalance forces and torques would be present at the stator, just like in a ball bearing.

A simple suspension loop model is used to introduce and to discuss qualitatively the different proposed kinds of AVS. It is shown in Fig. 1. It consists of a controller, a power amplifier including the force actuator and the rotor as the plant.

The loop is depicted in a possibly unusual way with the disturbances due to unbalance movement of the measurement surface and other noise as input and the force as output.

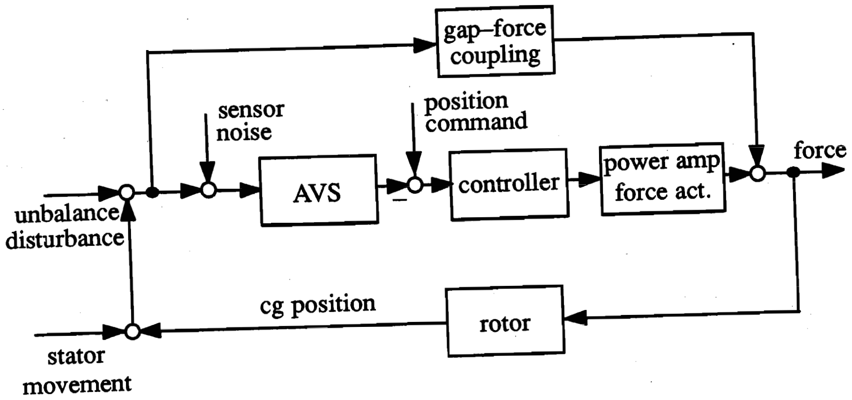

Fig. 1 Simple suspension loop model

AVS means, that the sensor disturbances must be filtered out before reaching the power amplifier and becoming force or torque. Thus a block 'AVS' is introduced in the loop between sensor and controller which must be designed to filter the disturbances out of the measurement signal while keeping the useful information for the suspension loop.

If there is a gap–force coupling in the bearing, the synchronous forces are produced in the bearing before it is possible to filter them out. This is true for all electromagnetic force generation principles, where a change of the gap causes a change of the (bias or permanent) flux and thus of the force. Then these forces must be identified and cancelled by inverse AVS force components. This seems to be more complicated as just to filter, so it is better to have no gap–force coupling. Thus the better choice for a low noise wheel is the electrodynamic principle, where the generated force is independent of the relative position or the relative motion of rotor and stator.

The sensor noise in a magnetic bearing consists of a synchronous component, i.e. of a frequency equal to the rotational speed, and harmonics thereof. Thus an AVS must be either selective and speed adaptive or it must cover the whole frequency range of the disturbances. In the following, several methods of active vibration suppression are discussed, some of them speed tracking, others covering a broad frequency range.

3.1 Tracking Notch Filter (TNF)

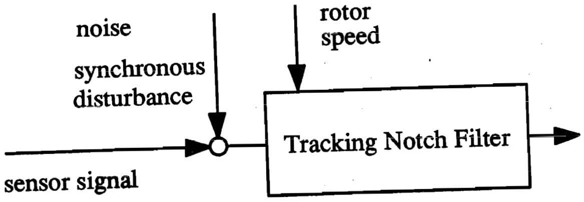

Fig. 3–1 AVS with Tracking Notch Filter

This AVS method [6,4] uses a notch filter, the notch frequency of which is tracking the synchronous speed of the rotor (see Fig. 3–1). Thus, depending on the steepness of the notch, all synchronous noise is removed from the feedback signal more or less.

The disadvantages are that instability occurs in the speed range below the cross–over frequency of the suspension, which must be circumvented by switching the AVS off in the critical speed range. Furthermore, harmonics are not rejected.

3.2 Lead – High order lag (LHL)

The conventional lead lag approach, i.e. a lead in the controller and the parasitic lags in the loop, does not reject sensor noise before becoming bearing force, it even amplifies it, because the highest gain of the loop part between sensor noise input and power amplifier output is at high frequencies, until measurement and parasitic lags are reached.

A possibility to suppress the high frequency noise is to insert a low pass filter between sensor and controller to get a gain decay in the high frequency area of interest (see Fig. 3–2). The higher the order of the filter, the better is the attenuation of the noise.

The advantage of this principle is, that it attenuates all noise beyond the cut off frequency, synchronous noise, harmonics and other. Further it is very simple.

The disadvantage is, that it does not work as long as the speed is below the cut off frequency of the filter.

The impact on the system performance is, that the suspension controller must be adjusted to operate at a very low frequency resulting in a low bandwidth control loop. Thus it will not work in the tilt d.o.f.'s of the wheel, it is applicable only in the translational axes.

With a LHL, the command response becomes very slow and the stiffness very low, but that means no disadvantage in a vibration sensitive environment as long as no external forced displacements exceeding the gap of the bearing are present.

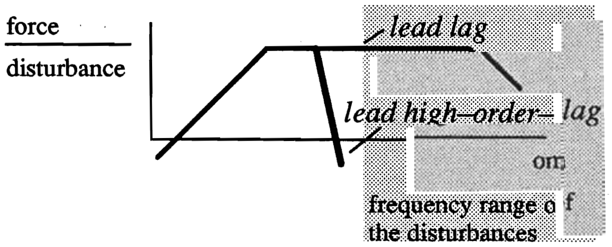

Fig. 3–2 Principal Bode Plot

3.3 Bucket Brigade Device (BBD)

The central component of this approach is a BBD with a positive feedback.

It is fed with the high–pass filtered sensor signal and clocked with a signal taken from the rotor position. The number of clock periods per revolution is equal to the number of states of the BBD.

The idea is depicted in Fig. 3–3. The sensor signal is highpass filtered and attenuated by a small factor a, say a = 0,1. Then it is fed to the BBD, which is equipped with a feedback with the gain (1 – a) = 0.9. Thus during steady state operation after a few revolutions of the rotor, only the synchronous component and the associated harmonics of the sensor signal are circulating in the BBD loop, because all other frequencies do not match the length of the BBD.

The output is then subtracted from the sensor signal which cancels the unwanted disturbances some revolutions later.

This results in a tracking notch filter for the synchronous disturbance, and, this is the main advantage, for all harmonics. The BBD can be implemented in analogous or digital hardware. From the systems stability point of view, the BBD has the same influence as a simple tracking notch filter, that means it destabilizes the system beyond a certain frequency.

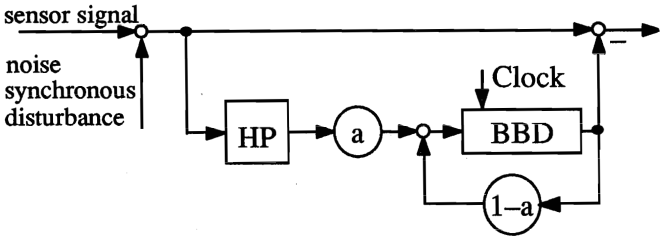

Fig. 3–3 AVS with Bucket Brigade Device

3.4 Synchronous Sampling Control (SSC)

The central idea is that, if the rotor position is sampled only once per revolution, neither synchronous signal components nor their harmonics will be detected. This results in a sampling control system with a speed varying sampling rate.

The implementation of the sampling is very easy, a sample–hold element must be triggered by a mark on the rotor.

The impacts are that the varying sampling rate necessitates adaptive control, and it will not work proper at low speed. Thus the sample–hold element must be switched to permanently transparent below a certain frequency.

If problems arise with unsynchronous frequencies higher then half the sampling rate, they can be overcome by means of a anti–aliasing filter.

The complexity of the whole implementation depends on the application, i.e. whether a wide speed range must be covered necessitating scheduled controller parameter and a tracking anti–aliasing filter or if it is sufficient to have constant parameter set for a certain speed–range.

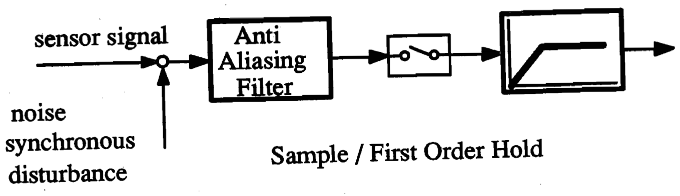

Fig. 3–4 AVS by sampling control

3.5 Model Following Control (MFC)

This is a possibility, which differs from the others because it is not only some kind of filter between the sensor and the controller.

The principle idea of the model following control is to use the output of an observer, simply a double integrator, for the control feedback. The observer output is well suited for low noise purposes, because it does not contain any disturbances. Fig. 3–5 shows the block diagram of the control loop with observer, which is fed with the current command signal. Since there is a linear relationship between current and force in an electrodynamic system, the observers output will be very close to the real position of the rotor.

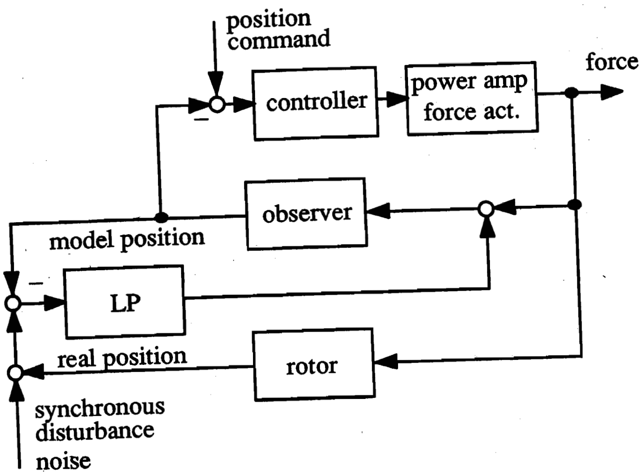

Fig. 3–5 Suspension loop with observer

To prevent the observer from long term drift effects, the low pass filtered difference between the real position signal and the model is used to correct the observers state variables. Thus from the real sensor signal only the lowest (near dc) frequency components are used and the remaining noise in the suspension loop is very small.

4. Comparison of the AVS strategies

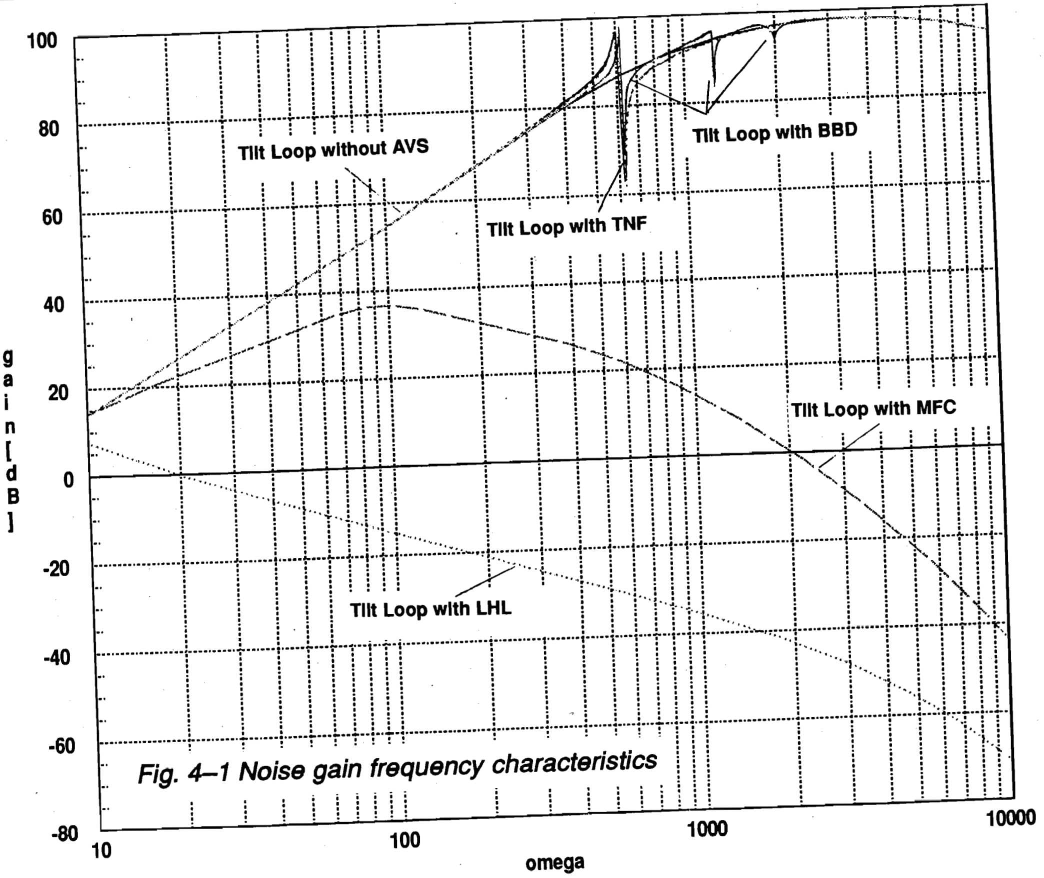

Fig. 4–1 Noise gain frequency characteristics

The different AVS methods have been investigated by linear analysis and time domain simulations of a single suspension loop as representative of the three translational d.o.f.'s and also of the coupled tilt loops.

Fig. 4–1 shows the gain characteristics from the sensor disturbance inputs to the force output. The best results can be achieved with LHL and MFC. TNF and BBD (both calculated for a speed of 6000 rpm) are difficult to distinguish, BBD has just some more notches at the harmonics. The results in terms of noise suppression figures of the synchronous disturbance and the first harmonic at a speed of 6000 rpm are summarized in the following table together with the most important features, advantages and drawbacks of the different methods.

Some of the investigated methods turned out to be unstable in the coupled tilt loops nearly over the whole speed range, these are LHL and SSC. BBD has been found to be of insufficient performance, because it was not possible to generate all the disturbance cancelling signal components with the correct phase. TNF was discarded because it makes the loops partly unstable and rejects no harmonics.

Finally MFC has been chosen as the superior AVS principle, because it offers very good suppression results and it keeps the active stiffness, i.e. the wheel is usable as tilt actuator in the attitude control loop of spacecraft.

The obtained suppression values are considered as theoretical values, which will presumably not be reached in the real implementation, but can be taken as indicator, that an improvement of about 40 dB at least should be achievable practically.

AVS Method	Noise Suppression in dB compared to the loops withot AVS				Remarks
	Single Loop		Coupled Tilt Loop		
	Synchronous	1. Harmonic	Synchronous	1. Harmonic	
TNF	25	0	25	0	– single loop unstable from 0 to 4500 rpm – coupled tilt loop unstable from 0 to 2500 rpm – no harmonics rejection! – notch mismatching removes whole suppression effect – poor dynamic behaviour + loop stiffness for external forces not affected + command response not affected
LHL	72	101	unstable in the usable speed range	unstable in the usable speed range	– coupled tilt loops unstable at speeds above 40 rpm! – loop stiffness for external forces extreme low – command response extreme slow + harmonics rejection
BBD	13	8	not further investigated because of insufficient performance	not further investigated because of insufficient performance	– single loop partly unstable – unacceptable performance + harmonics rejection
SSC	? theoretically infinite	? theoretically infinite	unstable in the usable speed range	unstable in the usable speed range	– single loops partly unstable – coupled tilt loops completely unstable + harmonics rejection
MFC	65	108	65	76	– loop stiffness for external forces extreme low (but this can be easily overcome) + command response not affected + harmonics rejection

Fig. 4–2 Summary of the AVS results and characteristics

5. Implementation of the MFC

The MFC is currently being implemented in the Teldix 5 d.o.f. [2], which is short described in the annex.

Two problems remain with this principle. Firstly there is the poor passive stiffness, i.e. the stiffness against externally impressed stator movements. If the satellite fires a thruster for example, the stator moves towards the rotor within fractions of a second and the suspension control cannot react fast enough. This problem can be solved with a second, faster feedback for the observer. This is depicted in Fig. 5–1. The difference of the real position and the observer position is fed through a low pass filter to achieve the long term compensation of drift effects. To control the faster externally impressed stator movements, this difference is additionally fed to a limit switch, which for example detects if the difference exceeds half of the gap. If so, it uses a second, stronger feedback to force the observer position immediately to the real position and, with this, the suspension loop can react and prevent a touch down of the rotor. During the activity of the limit switch, the low noise quality is of course reduced.

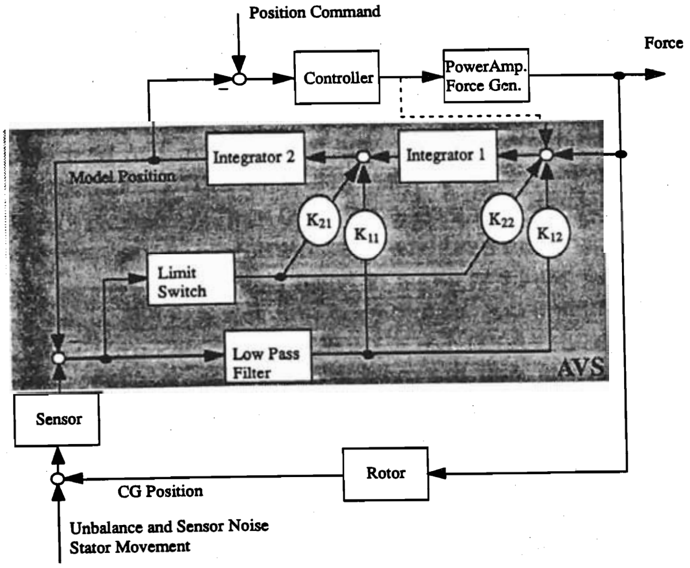

Fig. 5–1 MFC with touch down protection

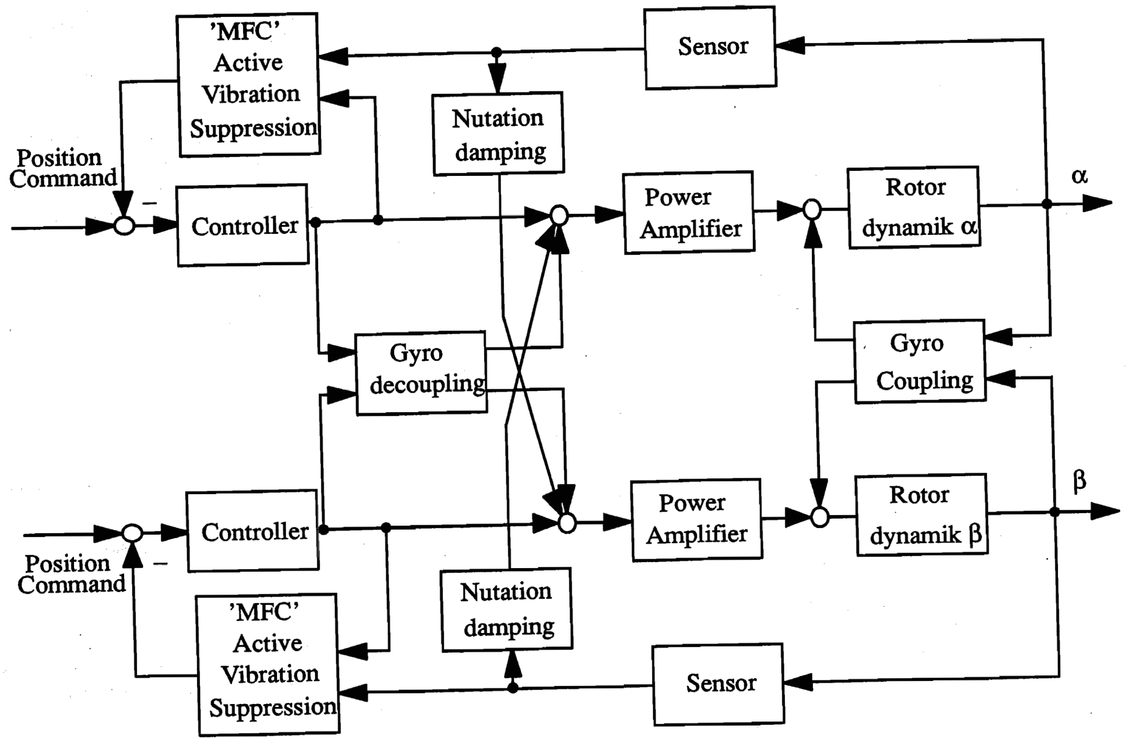

Fig. 5–2 MFC in the tilt loops

The second problem is, that this method is not directly applicable in the gyro–coupled tilt loops, because then the model would not represent the real plant. The gyro–couplings must be either introduced into the observer too, or a decoupling network [2] must be used to distribute the controller outputs over both torque inputs. The second possibility is preferred, because it additionally improves the dynamic behaviour of the tilt loops. Then each controller sees the same plant as if the wheel would stand still and the observer remains the same as before. The overall tilt control system with MFC is shown in the block diagram Fig. 5–2. Additionally a nutational damping cross coupling is foreseen, because the damping of the nutational mode can become poor due to the vibration suppression.

Some results achieved with the MFC in the tilt axes of the real wheel are shown in the next figures. Fig. 5–3 compares the torque that is induced into the wheels mounting base, for example the satellite, at a speed of 2000 rpm. It can be seen, that the suppression works fairly well at this speed already. Considering that the wheel will operate nominally at 6000 rpm and that the unbalance disturbances without AVS would increase quadratic while in the AVS case the disturbance rejection increases with frequency, very good suppression results can be expected at 6000 rpm.

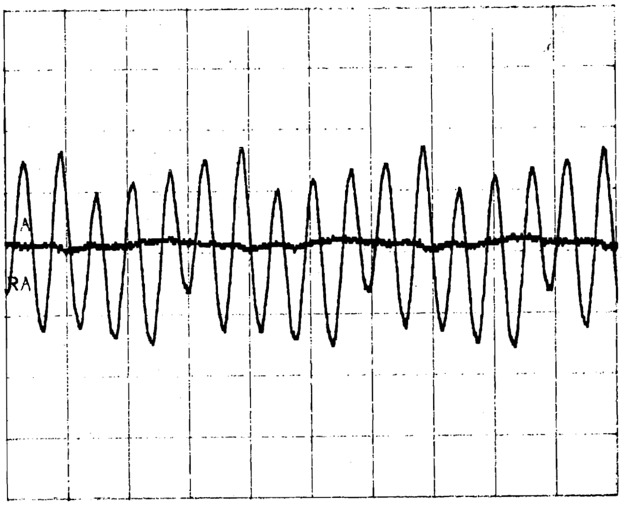

Fig. 5–3 Tilt torque with and without MFC at 2000 rpm

Fig. 5–4 gives some insight in the dynamic behaviour of the system by depicting the responses of the wheel and the observer on a small step applied at the tilt angle reference input. The difference in the superimposed noise is evident and it is obvious that the observer output causes much less disturbance torque in the loop than the real position signal. Furthermore it is demonstrated that the responses are globally of the same time behaviour and thus the vibration suppression does not affect the active stiffness.

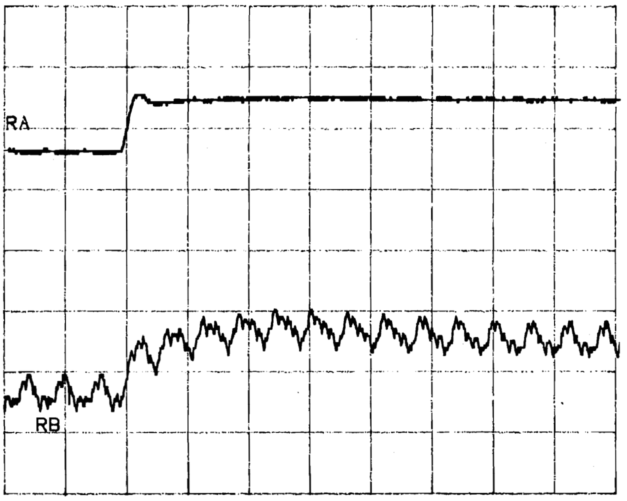

Fig. 5–4 Small signal step response of the tilt loop with MFC at 2000 rpm ; RA: observer , RB: sensor.

6 Summary

The vibration problem in magnetic bearings has been described and the possible sources have been identified. Several strategies of Active Vibration Suppression, different in terms of expenditure and performance, have been discussed.

A comparison between these AVS candidates resulted in the MFC as the superior active vibration suppression system. It provides very good noise suppression results, works in all axes of the magnetic bearing and keeps the active stiffness, which is required if the wheel is used in the attitude control system of a satellite.

First results of the implementation of the MFC in the Teldix electrodynamic bearing wheel have been shown which confirmed qualitatively the theoretical predictions.

A. The Teldix Electrodynamic Bearing Wheel

The Active Vibration Suppression has been developed for the Teldix magnetic bearing wheel [2], which is short described in the following.

It is a 5–d.o.f. electrodynamic bearing wheel, because this type is controllable in all axes which is important for AVS and, furthermore, it has the vernier gimballing capability.

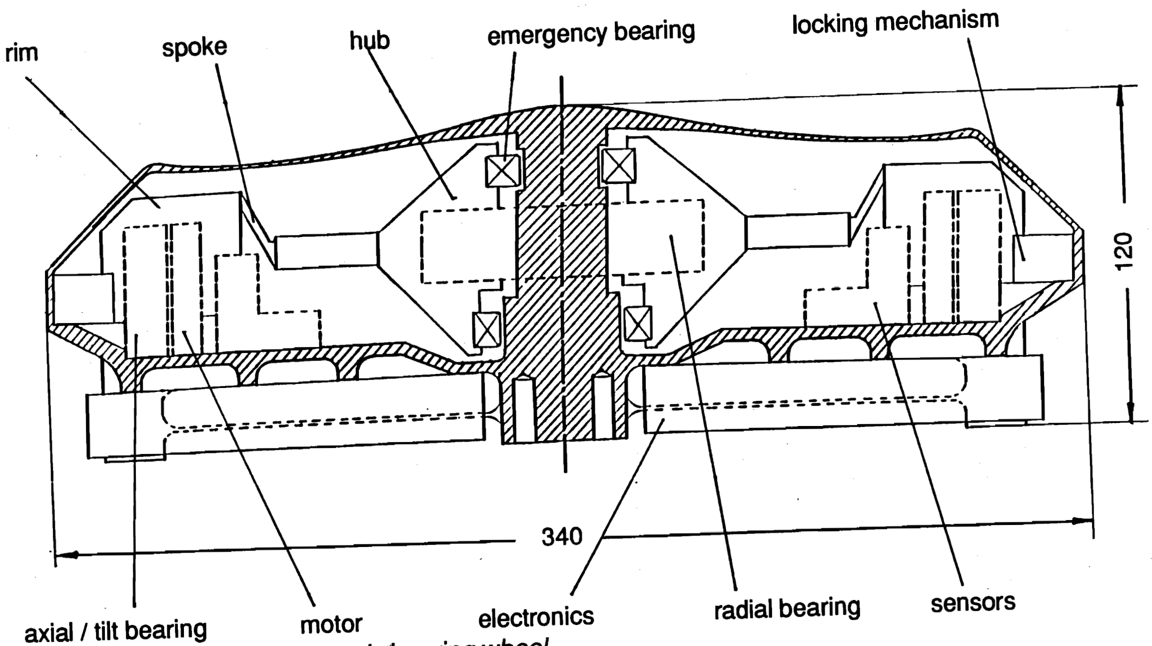

Fig. A–1: Teldix 5–d.o.f. electrodynamic bearing wheel

Fig. A–1 shows a principal sketch of the wheel. The rotor is essentially composed of a rim which is connected to the hub by five titanium springs. Two slots in the rim, which are equipped with Neodymium–Iron magnets, form, together with corresponding epoxi embedded coils on the stator, the axial / tilt actuators and the drive motor. The ironless armature coil consists of four 90° segments. The axial forces are provided by applying a similar current to all coils. The tilting torques about the two perpendicular radial axes are yielded by exciting two opposite coils alternatively.

The hub contains the radial center bearing and carries the emergency bearings.

Any deviation from the nominal rotor position is detected by a set of four axial and two radial position sensors, and – using five control loops – balanced by forces generated in the coils

The drive motor is of the brushless, ironless d.c. type.

The main data are:

Diameter : 0.34 m
Height : 0.12 m
Rotormass : 6.65 kg
Total Mass : 13 kg
Nom. Speed : 6000 (10000) rpm
Inertia : 0.1 kgm2
Momentum : 60 (100) Nms
Gimballing Angle : 1.0 °
Slew Rate : 10 °/s (imax = 3A, 60 Nms)
Angular Momentum
Cross Component: 1 Nms (1°, 60 Nms)

References

[1] Ball Bearing Versus Magnetic Bearing Reaction and Momentum Wheels as Momentum Actuators
W. Auer
AIAA 'Global Technology 2000', Baltimore 1980.

[2] A 5 Degree of Freedom Electrodynamic–Bearing Wheel for 3–Axis Spacecraft Attitude Control Applications
U. Bichler, T.Eckardt
Proceedings of the First International Symposium on Magnetic Bearings, ETH Zurich, June 6–8, 1988.

[3] Magnetic Bearing With Rotating Force Control
H.M.Chen, M.S.Darlow
Transactions of the ASME, VOL. 110, Jan. 1988

[4] Synchronous Response Modelling and Control of an Annular Momentum Control Device
R.Hockney, B.G.Johnson, K.Misovec
NASA Contractor Report 4166

[5] A Design of Robust Servo Controllers for an Unbalance Vibration in Magnetic Bearing Systems
F. Matsumara, M. Fujita, C. Oida
Proceedings of the First International Symposium on Magnetic Bearings, ETH Zurich, June 6–8, 1988.

[6] Vorrichtung zur Kompensation synchroner Störeinflüsse bei einem magnetisch gelagerten Läufer.
H.Habermann, M.Brunet, P.Joly
Patent 2658668